IEEE Access
Multidisciplinary ⋮ Rapid Review ⋮ Open Access Journal

Received 28 January 2025, accepted 21 March 2025, date of publication 26 March 2025, date of current version 4 April 2025.

Digital Object Identifier 10.1109/ACCESS.2025.3554813

RESEARCH ARTICLE

Unsupervised Video Anomaly Detection Using Video Vision Transformer and Adversarial Training

SHIMPEI KOBAYASHI, AKIYOSHI HIZUKURI, AND RYOHEI NAKAYAMA, (Member, IEEE)
Graduate School of Science and Engineering, Ritsumeikan University, Kusatsu, Shiga 525-8577, Japan
Corresponding author: Akiyoshi Hizukuri (hizukuri@fc.ritsumei.ac.jp)

ABSTRACT Surveillance cameras have been recently introduced in various locations to maintain public safety. However, it is tedious for security personnel to continue observing videos obtained by surveillance cameras because abnormal events rarely occur. Consequently, this study aims to develop an unsupervised anomaly detection method for surveillance videos based on the prediction of future frame and optical flow magnitude using adversarial networks. Our database consists of two public datasets for anomaly detection: UCSD Pedestrian 2 (UCSD Ped2) and ShanghaiTech Campus. The proposed network consists of a generator and a U-Net-based discriminator. The generator has an encoder based on a video vision transformer and two decoders that independently predict the future frame and optical flow magnitude using feature maps extracted from the encoder at different resolutions. The U-Net-based discriminator identifies at the pixel level whether the image is a ''real'' or ''false'' frame predicted by the generator. The generator and U-Net-based discriminator in the proposed network are trained through adversarial training. Finally, anomaly detection is performed based on element-wise subtraction between the predicted future frame and the optical flow magnitude and their corresponding ground truth frames. The areas under the receiver operating characteristic curve (AUC) with the proposed network were 97.5% for UCSD Ped2 and 85.8% for ShanghaiTech Campus. The AUC for the proposed network was also greater than those of well-known anomaly detection methods.

INDEX TERMS Generative adversarial networks, surveillance videos, U-Net-based discriminator, unsupervised anomaly detection, video vision transformer.

I. INTRODUCTION

Recently, over 770 million surveillance cameras have been installed in various locations worldwide such as schools, subway stations, and stores to maintain public safety [1]. Grand View Research reports that the surveillance camera market is expected to grow at an average annual rate of 10.7% between 2023 and 2030 [2]. However, it is tedious for security personnel to continuously monitor videos obtained from surveillance cameras because abnormal events rarely occur. Therefore, security personnel need to develop a computerized anomaly detection method for surveillance camera videos.

Previous detection methods for surveillance cameras have learned the relationship between normal and abnormal videos. However, these methods require the collection of a considerable number of samples for each target video, which is often difficult, particularly for abnormal videos. Therefore, an anomaly detection method that learns only normal events is more suitable for surveillance cameras. Park et al. [3] developed an anomaly-detection method using a convolutional neural network (CNN). This method predicted a future frame from four consecutive past frames, including the current frame. Anomaly detection was performed based on the prediction error (i.e., the difference between the predicted future frames and their ground truth frames). Baradaran and Bergevin [4] proposed a computerized anomaly detection method that predicts the magnitude of optical flow

The associate editor coordinating the review of this manuscript and approving it for publication was Mehul S. Raval.

© 2025 The Authors. This work is licensed under a Creative Commons Attribution-NonCommercial-NoDerivatives 4.0 License.
For more information, see https://creativecommons.org/licenses/by-nc-nd/4.0/

while eliminating the directional information associated with motion. This method focused on the magnitude of human motion while ignoring nuisance parameters such as appearance, background, and other irrelevant factors. Ahn et al. [5] introduced VideoPatchCore, which is an extension of PatchCore [6], for video anomaly detection. This method employed both local and global streams, and utilizes three memory banks to extract the spatiotemporal characteristics of videos, thereby enabling the detection of various types of anomalies.

Additionally, several researchers have reported on the application of transformers to anomaly detection. Yuan et al. [7] proposed TransAnomaly based on U-Net with a video vision transformer (ViViT) [8] to analyze spatial and temporal information. Inspired by TransAnomaly, we previously developed a computerized method for detecting abnormal events by introducing channel attention blocks into TransAnomaly [9]. Channel attention blocks produce feature maps that focus on the important channels. Although the performance of anomaly detection in our previous method was improved compared to that of TransAnomaly, the method experienced some issues. First, the method performed anomaly detection from videos based on the prediction error (i.e., the difference) between the predicted future frames and their corresponding ground truth frames, which means that the prediction error can contain considerable noise caused by constant background changes. Consequently, the prediction accuracy was insufficient. Second, although motion information such as that of humans and vehicles is crucial for anomaly detection, the method did not have a module for capturing such information.

The main contributions of this study are summarized as follows.

1) We develop an unsupervised video anomaly detection method for surveillance videos based on future frame prediction using adversarial networks to reduce prediction errors.
2) The proposed network predicts not only future flames, but also the optical flow magnitude, effectively capturing motion information for enhanced anomaly detection.
3) The proposed network demonstrates superior anomaly detection accuracy on two publicly available datasets compared to well-known anomaly detection methods.

The remainder of this paper is organized as follows. Section II describes the dataset used in this study. Section III describes the proposed unsupervised anomaly detection method for surveillance videos based on future frame and optical flow magnitude prediction using adversarial networks. Section IV presents the performance evaluation, including the parameter settings. Section V describes the experimental results and a comparative analysis with previous methods in detail. Section VI presents the findings discussions as well as the study limitations and scope for future studies. Finally, Section VII concludes the study.

II. DATASET

Two publicly available datasets for anomaly detection, UCSD Pedestrian 2 (UCSD Ped2) [10] and ShanghaiTech Campus (ShanghaiTech) [11], were used to train and evaluate the proposed network. These datasets are widely utilized as benchmarks for anomaly detection. Details of each dataset are provided below.

The UCSD Ped2 dataset consists of 16 training videos without abnormal events and 12 testing videos with both normal and abnormal events. Each video contains 120-180 grayscale frames with a size of 360 × 240 pixels. The testing videos include 362 normal and 1,648 abnormal frames. Normal events are defined as people walking or jogging on a walkway, whereas abnormal events are defined as intrusions by cars, bicycles, skateboards, and wheelchairs. In the UCSD Ped2 dataset, all abnormal regions are provided as mask images.

The ShanghaiTech dataset consists of 330 training videos without abnormal events and 107 testing videos containing both normal and abnormal events. Each video contains 36-1,439 color frames with a resolution of 856 × 480 pixels. The testing videos include 23,465 normal and 17,326 abnormal frames. Normal events are defined as people walking and standing on a walkway, whereas abnormal events are defined as people fighting, running, chasing, jumping, throwing objects, and intrusions by cars and bicycles. The ShanghaiTech dataset contains movements captured from various angles, whereas movements in the UCSD Ped2 dataset are parallel to the camera.

The proposed network is developed and evaluated using PyTorch on a workstation (CPU: Intel Core i7-9700X processor; RAM: 64 GB; GPU: NVIDIA GeForce RTX 2080 Ti).

III. METHODS

Fig. 1 presents an overview of the proposed network. The proposed network predicts the future frame and optical flow magnitude from four consecutive past frames, including the current frame. Anomaly detection is performed based on element-wise subtraction between the predicted future frames, optical flow magnitude, and their corresponding ground truth.

The proposed network consists of a generator and U-Net-based discriminator [12]. The generator has an encoder based on a video vision transformer (ViViT) and two decoders that independently predict the future frame and optical flow magnitude using feature maps extracted from the encoder at different resolutions. The U-Net-based discriminator identifies whether the image predicted by the generator is a "real" or "fake" frame at the pixel level. The generator and U-Net-based discriminator in the proposed network are trained through adversarial training. Finally, anomaly detection is performed based on element-wise subtraction between the predicted future frame, optical flow magnitude, and their corresponding ground truths. Details of the proposed network are presented below.

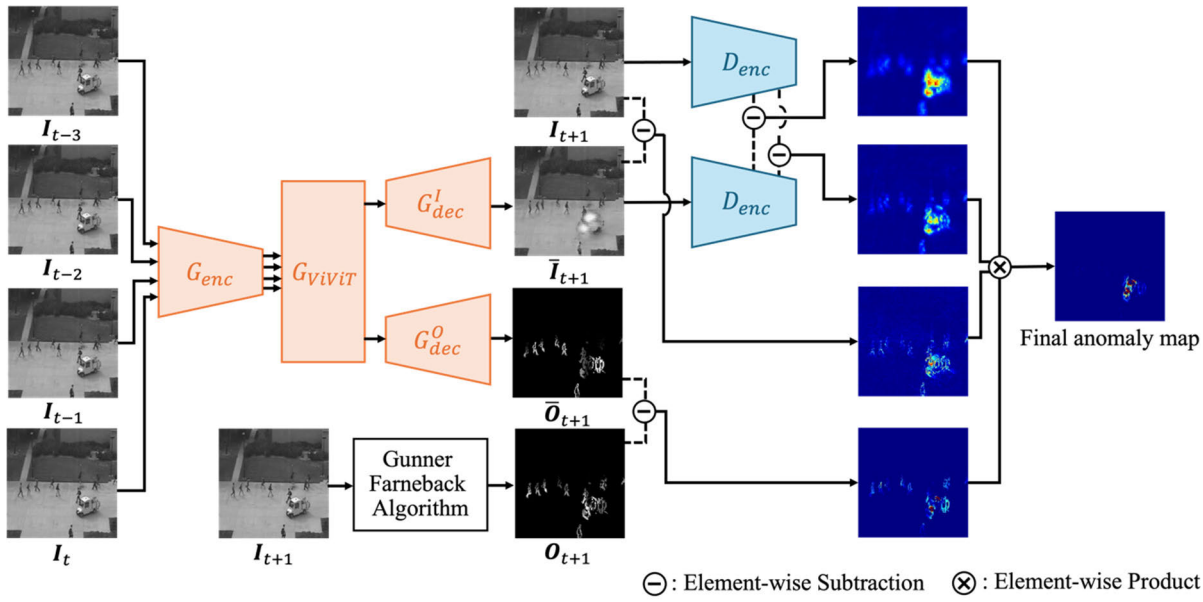

FIGURE 1. Overview of the proposed network.

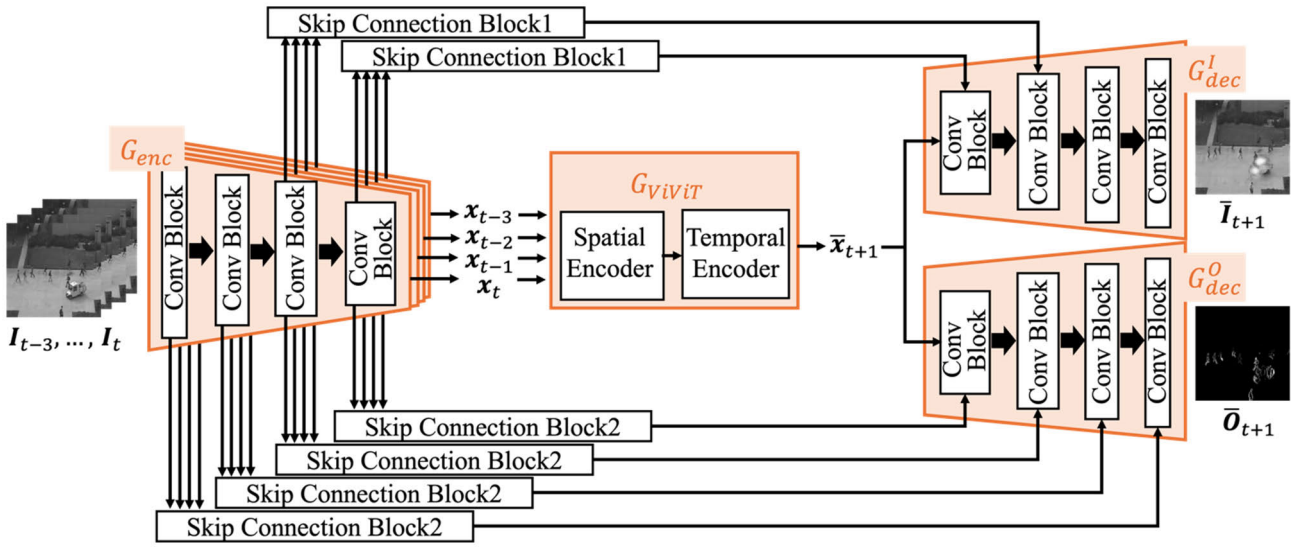

FIGURE 2. Architecture of the generator.

A. GENERATOR

As shown in Fig. 2, the generator consists of encoders (G_{enc}), a ViViT module (G_{ViViT}), a decoder for future frame prediction (G^I_{dec}), and a decoder for optical flow magnitude prediction (G^O_{dec}). Four consecutive frames, $\boldsymbol{I}_{t-3}$ …, $\boldsymbol{I}_t$, including the current frame, extracted from a video, are independently input into the encoder (G_{enc}) in the generator. Here, t represents the number of frames in the video. All frames are resized to 256 × 256 pixels with 3 channels, and the pixel values are normalized to the range [−1, 1]. The encoder (G_{enc}) consists of the repeated application of four two-dimensional (2D) convolutional layers with a kernel size of 3 × 3 and a stride of 1, each followed by a spectral normalization layer [13] to stabilize the training of the encoder, a batch normalization layer, a rectified linear unit (ReLU) activation function, and a channel attention block [14]. The channel attention block produces feature maps that focus on the important channels for detecting abnormal events [15], [16], [17], [18]. In the channel attention block, the feature maps obtained from the convolutional layer are input to a global average pooling (GAP) layer. Subsequently, a one-dimensional feature vector is generated by calculating the average values for each channel in the feature maps. The GAP layer is followed by a convolutional layer with a kernel

size of 3 × 3 and a stride of 1, spectral normalization layer, ReLU activation function, convolutional layer with a kernel size of 3 × 3 and a stride of 1, spectral normalization layer, and sigmoid function to compute the channel weights. Here, a max-pooling layer with a kernel size of 2 × 2 and a stride of 2 is applied after the first, second, and third convolutional blocks. The encoder outputs four feature maps ($\boldsymbol{x}_{t-3}$, $\boldsymbol{x}_{t-2}$, $\boldsymbol{x}_{t-1}$, and $\boldsymbol{x}_t$), each with a size of 32 × 32 and 512 channels. The outputs of the channel attention block are fed into the subsequent layers in the network.

Feature maps at different resolutions obtained from G_{enc} are fed into G_{ViViT}. As shown in Fig. 3, G_{ViViT} consists of temporal transformer and spatial transformer encoders. Prior to feeding the feature maps ($\boldsymbol{x}_{t-3}$, $\boldsymbol{x}_{t-2}$, $\boldsymbol{x}_{t-1}$, and $\boldsymbol{x}_t$) into G_{ViViT}, the feature maps are embedded as groups of tokens using temporal patch embedding. Token embedding involves reshaping each three-dimensional feature map $\boldsymbol{x}_i \in \mathbb{R}^{C\times H\times W}$ into a sequence of flattened 2D patches $\boldsymbol{x}_{p_i} \in \mathbb{R}^{N_p\times(P^2\cdot C)}$, where (H, W) represents the resolution of feature map $\boldsymbol{x}_i$, C is the number of channels, and (P, P) is the patch resolution. The number of patches, N_p, is calculated as $N_p = \frac{HW}{P^2}$, indicating the total number of patches. Therefore, there are N_p groups of tokens, each corresponding to the same spatial location across different temporal locations. The flattened patches are projected to form tokens $\acute{\boldsymbol{x}}_{p_i,j}$, where $j = 1, 2, \ldots, N_p$, and $\acute{\boldsymbol{x}}_{p_i,j}$ represents the jth projected spatial token within sequence $\boldsymbol{x}_{p_i}$.

Similarly, temporal patch embedding is achieved by adding a temporal position token, z_j, corresponding to spatial position j within each token group. This process can be expressed as:

$$z_j = [\boldsymbol{x}_{pred_j}; \acute{\boldsymbol{x}}_{p_1,j}; \acute{\boldsymbol{x}}_{p_2,j}; \ldots; \acute{\boldsymbol{x}}_{p_t,j}] + \boldsymbol{E}_{pos_j}, \tag{1}$$

where $\boldsymbol{x}_{pred_j}$ is the prediction token for the jth token group and $\boldsymbol{E}_{pos_j}$ is the temporal position embedding analogous to the class token in a ViT [19]. The temporal transformer encoder captures rich temporal positional information from the four feature maps processed by the G_{enc}. It comprises $\mathcal{L}_t$ layers of multihead self-attention (MSA) and multilayer perceptron (MLP) blocks. The output of the $\mathcal{L}_t^{th}$ layer of temporal transformer encoder $z_j^{\mathcal{L}_t}$ is formulated as:

$$\begin{aligned} z_j^{\mathcal{L}_t} &= MLP\{MSA(z_j^{\mathcal{L}_{t-1}}) + z_j^{\mathcal{L}_{t-1}}\} \\ &\quad + MSA(z_j^{\mathcal{L}_{t-1}}) + z_j^{\mathcal{L}_{t-1}}. \end{aligned} \tag{2}$$

Layer normalization is applied within the MSA and MLP blocks. The temporal transformer encoder outputs N_p token groups, each corresponding to the same spatial position j. The spatial transformer encoder encodes the global information and analyzes the relationships between the pixels within the prediction tokens. After applying spatial position embedding, the N_p prediction tokens pass through the spatial transformer, which consists of $\mathcal{L}_s$ layers. Subsequently, the prediction tokens are restructured into a feature map $\bar{\boldsymbol{x}}_{t+1}$, which serves as the final output of G_{ViViT}.

Feature map $\bar{\boldsymbol{x}}_{t+1}$ from G_{ViViT} is fed into the decoder (G^I_{dec}) to predict the frame image and into the decoder (G^O_{dec}) to predict the optical flow magnitude. As shown in Fig. 2, G^I_{dec} and G^O_{dec} consist of four sequentially arranged convolutional blocks. Each convolutional block is preceded by an upsampling layer with a kernel size of 2 × 2 and a stride of 2. After the fourth convolutional block, the final convolutional layer in G^I_{dec} with a kernel size of 1 × 1 and a stride of 1 generates frame image $\bar{\boldsymbol{I}}_{t+1}$ with a resolution of 256 × 256 × 3, whereas a similar layer in G^O_{dec} generates optical flow magnitude map $\bar{\boldsymbol{O}}_{t+1}$ with a resolution of 256 × 256 × 1. In G^I_{dec}, only the feature maps from the third and fourth convolutional blocks of G_{enc} are used. Conversely, the feature maps from all convolutional blocks are utilized in G^O_{dec}. As shown in Fig. 4(a), in skip connection block 1, the four feature maps are concatenated along the channel dimension. This is followed by a 2D convolutional layer, spectral normalization, and ReLU activation function, resulting in the generation of the feature map. As shown in Fig. 4(b), in the skip connection block 2, the differences between the four feature maps are calculated to generate three new feature maps. The absolute values of these feature maps are then concatenated along the channel dimension. Next, a 2D convolutional layer, spectral normalization, and a ReLU activation function are applied. Finally, this feature map is multiplied by the feature map generated in the skip connection block 1 to produce the final feature map.

B. DISCRIMINATOR

Fig. 5 presents an overview of the U-Net-based discriminator in the proposed network. This discriminator is designed to classify whether an image generated by the network is a "real" or "fake" frame from the dataset at the pixel level.

The encoder in the discriminator (D_{enc}) considers either the combination of $\boldsymbol{I}_{t+1}$ and $\boldsymbol{O}_{t+1}$ ($\boldsymbol{I}_{t+1}, \boldsymbol{O}_{t+1}$) or $\bar{\boldsymbol{I}}_{t+1}$ and $\boldsymbol{O}_{t+1}$ ($\bar{\boldsymbol{I}}_{t+1}, \boldsymbol{O}_{t+1}$) as the input. The ground truth of optical flow magnitude $\boldsymbol{O}_{t+1}$ is generated using the Gunnar-Farneback algorithm [20]. D_{enc} comprises four convolutional blocks with max-pooling layers (kernel size, 2 × 2; stride, 2) applied after the first, second, and third convolutional blocks. Each convolutional block consists of a 2D convolutional layer with a kernel size of 3 × 3 and a stride of 1, spectral normalization, batch normalization, a leaky ReLU activation function, and a channel attention block. Here, feature map $D_{enc}([\boldsymbol{I}_{t+1}, \boldsymbol{O}_{t+1}])$ or $D_{enc}([\bar{I}_{t+1}, \boldsymbol{O}_{t+1}])$ is produced by processing the output from D_{enc} through an average pooling layer and a linear layer.

The feature map output from D_{enc} is passed to decoder D_{dec} in the discriminator. D_{dec} consists of four convolutional blocks, with uppooling layers (kernel size 2 × 2, stride 2) applied before the first, second, and third convolutional blocks. After the fourth convolutional block, output feature map $D_{enc}([\boldsymbol{I}_{t+1}, \boldsymbol{O}_{t+1}])$ or $D_{enc}([\bar{\boldsymbol{I}}_{t+1}, \boldsymbol{O}_{t+1}])$ is produced by applying a convolutional layer (kernel size, 1 × 1; stride, 1).

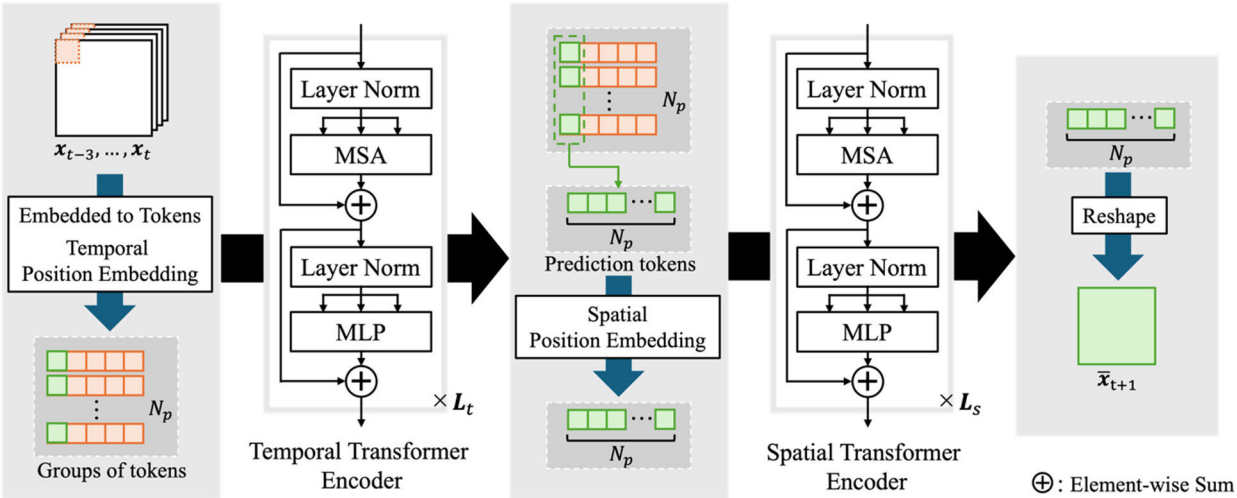

FIGURE 3. Architecture of the transformer block.

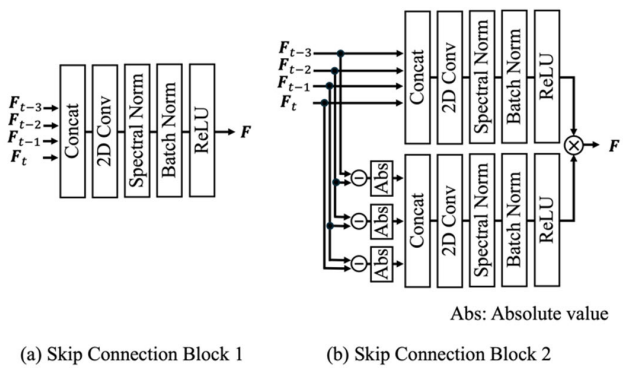

FIGURE 4. Architectures of the skip connection blocks 1 and 2.

C. LOSS FUNCTION

Loss function $\mathcal{L}_G$ of the generator in the proposed network is formulated as follows:

$$\mathcal{L}_G = \lambda_I \mathcal{L}_I + \lambda_O \mathcal{L}_O + \mathcal{L}^G_{D_{enc}} + \mathcal{L}^G_{D_{dec}}. \tag{3}$$

Here, λ_* represents the weighting factors. The image reconstruction loss, $\mathcal{L}_I$, and optical flow reconstruction loss, $\mathcal{L}_O$, measure how closely the predicted frame or optical flow magnitude matches their corresponding ground truths. These losses are calculated as follows:

$$\mathcal{L}_I = \frac{1}{N} \left\| \boldsymbol{I}_{t+1} - \bar{\boldsymbol{I}}_{t+1} \right\|_1, \tag{4}$$

$$\mathcal{L}_O = \frac{1}{N} \left\| \boldsymbol{O}_{t+1} - \bar{\boldsymbol{O}}_{t+1} \right\|_1, \tag{5}$$

where N denotes the number of pixels in each frame and $\|\cdot\|_1$ denotes the L1 norm. Conversely, $\mathcal{L}^G_{D_{enc}}$ and $\mathcal{L}^G_{D_{dec}}$ are defined as follows:

$$\begin{aligned}\mathcal{L}^G_{D_{enc}} &= -E_{I\sim p_I}[log(1 - D_{enc}([\boldsymbol{I}_{t+1}, \boldsymbol{O}_{t+1}]))] \\ &\quad - E_{\bar{I}\sim p_{\bar{I}}}[log(D_{enc}([\bar{\boldsymbol{I}}_{t+1}, \boldsymbol{O}_{t+1}]))],\end{aligned} \tag{6}$$

$$\begin{aligned}\mathcal{L}^G_{D_{dec}} &= -E_{I\sim p_I}[\sum_{x,y} log[(1 - D_{dec}([\boldsymbol{I}_{t+1}, \boldsymbol{O}_{t+1}]))_{x,y}]] \\ &\quad - E_{\bar{I}\sim p_{\bar{I}}}[\sum_{x,y} \log[(D_{dec}([\bar{\boldsymbol{I}}_{t+1}, \boldsymbol{O}_{t+1}]))_{x,y}]],\end{aligned} \tag{7}$$

where $E_{*\sim p_*}$ denotes the expectation of sample $*$ drawn from data distribution p_*. $[(1 - D_{dec}([\boldsymbol{I}_{t+1}, \boldsymbol{O}_{t+1}]))_{x,y}]$ and $[(D_{dec}([\bar{\boldsymbol{I}}_{t+1}, \boldsymbol{O}_{t+1}]))_{x,y}]$ represent the outputs of the discriminator at pixels (x, y).

$\mathcal{L}_D$ of the discriminator in the proposed network is defined as:

$$\mathcal{L}_D = \mathcal{L}^D_{D_{enc}} + \mathcal{L}^D_{D_{dec}}, \tag{8}$$

$$\begin{aligned}\mathcal{L}^D_{D_{enc}} &= -E_{I\sim p_I}[log(D_{enc}([\boldsymbol{I}_{t+1}, \boldsymbol{O}_{t+1}]))] \\ &\quad -E_{\bar{I}\sim p_{\bar{I}}}[log(1 - D_{enc}([\bar{\boldsymbol{I}}_{t+1}, \boldsymbol{O}_{t+1}]))],\end{aligned} \tag{9}$$

$$\begin{aligned}\mathcal{L}^D_{D_{dec}} &= -E_{I\sim p_I}[\sum_{x,y} \log[(D_{dec}([\boldsymbol{I}_{t+1}, \boldsymbol{O}_{t+1}]))_{x,y}]] \\ &\quad - E_{\bar{I}\sim p_{\bar{I}}}[\sum_{x,y} \log[(-D_{dec}([\bar{I}_{t+1}, \boldsymbol{O}_{t+1}]))_{x,y}]].\end{aligned} \tag{10}$$

D. ANOMALY SCORE

The proposed network is trained only on normal videos, allowing it to accurately predict normal events. However, these methods tend to provide inaccurate predictions for anomalous events. Therefore, we use the differences between the ground truth as well as the predicted frame and optical flow magnitude map to detect anomalies. However, relying solely on the differences across the entire frame can introduce significant noise in scenes with dynamic backgrounds. To address this issue, we leverage the ability of the discriminator to differentiate between "true" and "false" frames. Hashimoto et al. [21] inspired the use of discriminators. In the proposed network, the discriminator is designed to enhance anomalous regions by identifying them as "false" during

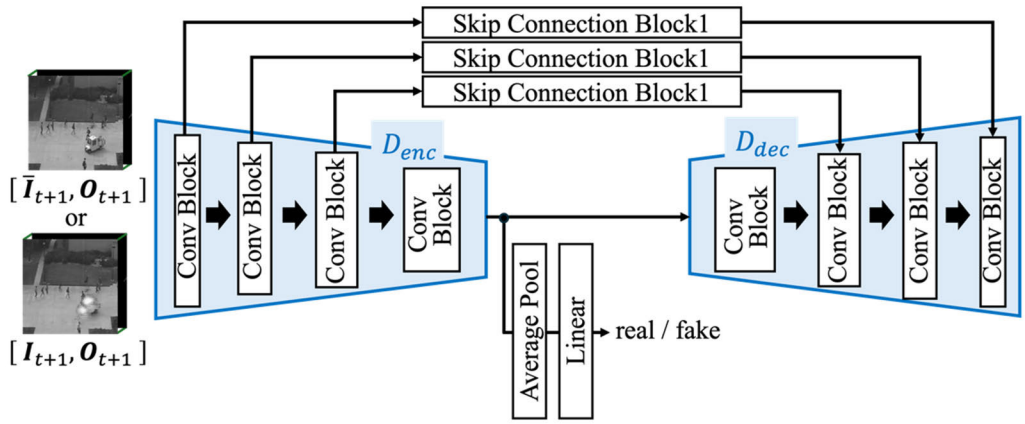

FIGURE 5. Architecture of the discriminator.

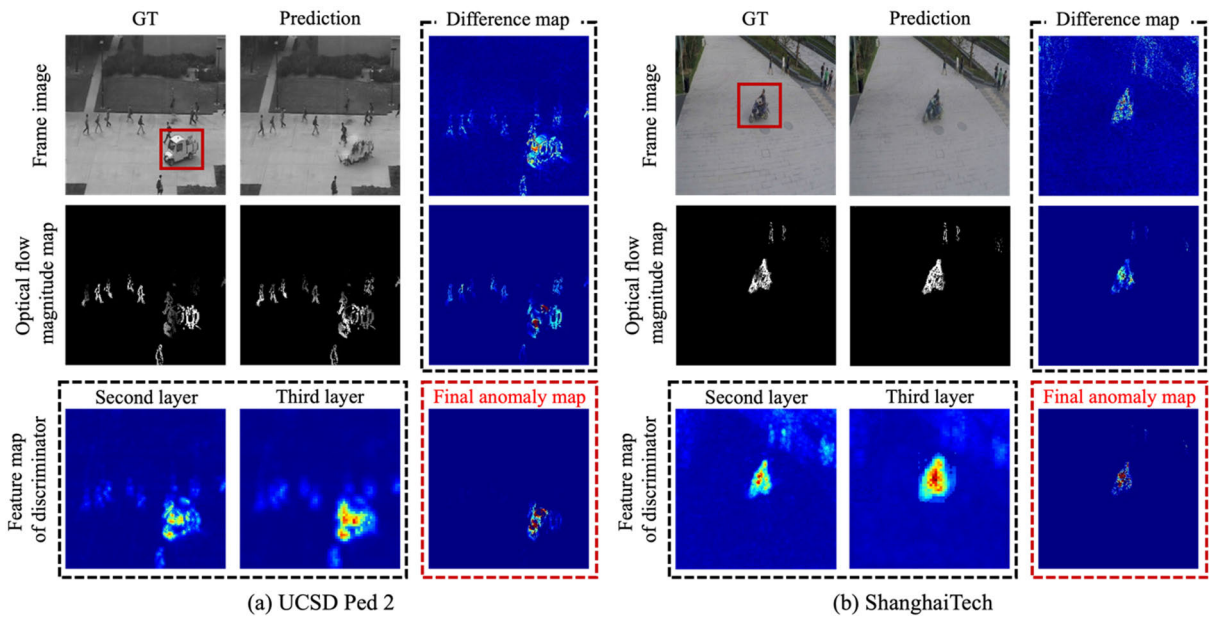

FIGURE 6. Results of anomaly map in (a) UCSD Ped 2 and (b) ShanghaiTech. The first row denotes the ground truth (GT) frame, prediction result, and their difference map. The red bounding box denotes the true abnormal region. The second row denotes the GT for optical flow magnitude map, prediction result, and their difference map. The third row shows the difference maps of the 2nd and 3rd layer features of discriminator. The area in the red rectangle shows the final anomaly map obtained by anomaly degree a(t).

inference, effectively reducing noise from dynamic backgrounds and improving anomaly detection accuracy. Based on the above, the anomaly score at frame t, $a(t)$, is defined as follows:

$$a(t) = \left\| \left| \boldsymbol{I}_t - \bar{\boldsymbol{I}}_t \right| * \left| \boldsymbol{O}_t - \bar{\boldsymbol{O}}_t \right| * \left| \boldsymbol{F}(2)_t - \bar{\boldsymbol{F}}(2)_t \right| * \left| \boldsymbol{F}(3)_t - \bar{\boldsymbol{F}}(3)_t \right| \right\|_1. \tag{11}$$

where $\boldsymbol{F}(*)$ represents the feature maps extracted from the $*^{th}$ convolutional block of D_{enc} when $\boldsymbol{I}_t$ and $\boldsymbol{O}_t$ are used as inputs and $\bar{\boldsymbol{F}}(*)$ denotes the feature maps extracted from the same convolutional block of D_{enc} when $\bar{\boldsymbol{I}}_t$ and $\boldsymbol{O}_t$ are used as inputs. Finally, anomaly score $S(t)$ is computed over all frames T in the test video as follows:

$$S(t) = \frac{a(t)}{\max(a(1), \ldots, a(T))}. \tag{12}$$

IV. EXPERIMENT SETTING

A. EVALUATION INDICES

To evaluate the network performance, we used the area under the receiver operating characteristics curve (AUC) [22]. The AUC scores ranged from 0.0 to 1.0. A higher AUC score indicates better detection capabilities. For the UCSD Ped2 dataset, we used the equal error rate (EER) [23] for pixel-level anomaly localization. The EER is the value where both the error rates, false positive and false negative rates, are equal.

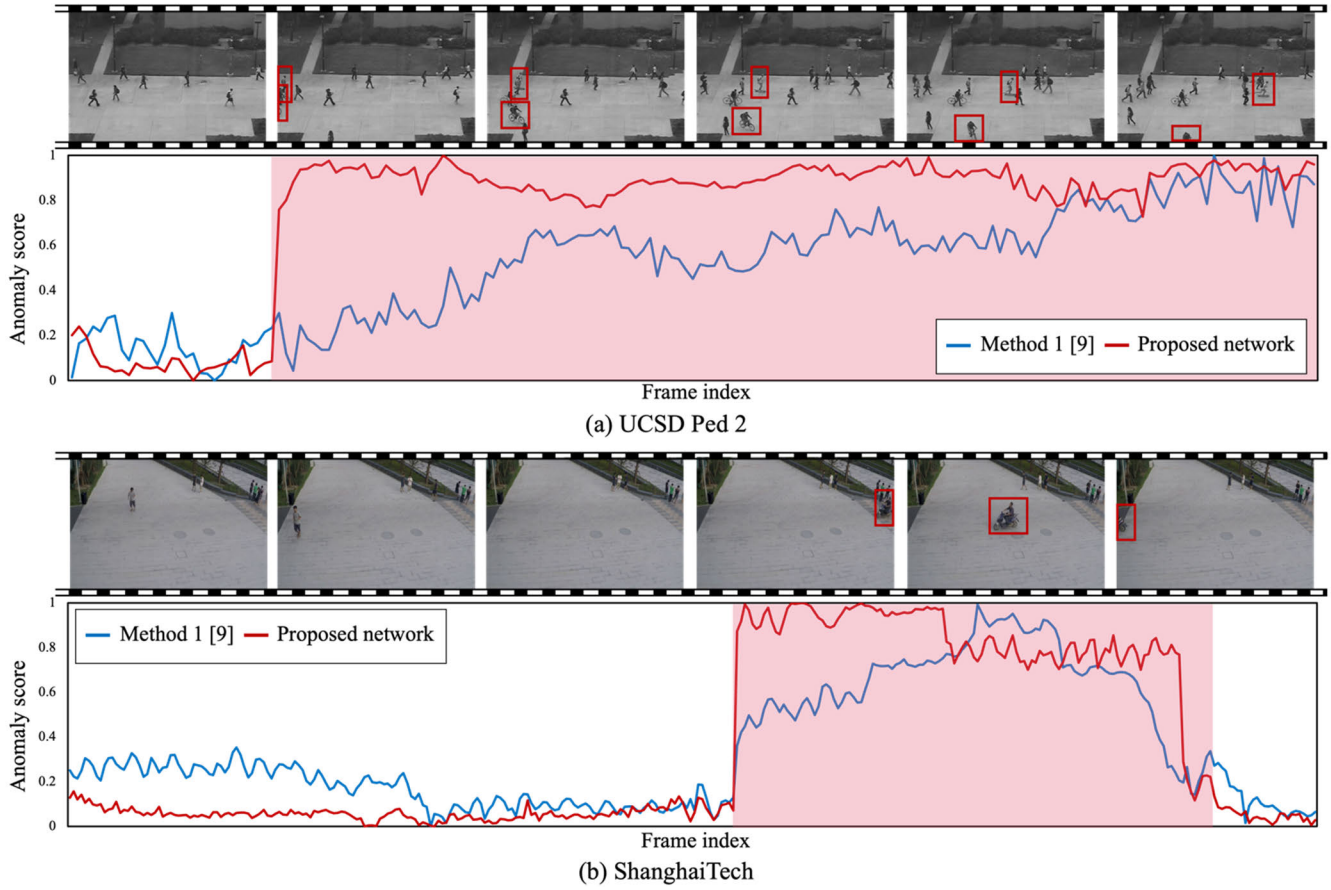

FIGURE 7. Experimental results of Method 1 and the proposed network on testing movies in (a) UCSD Ped2 and (b) ShanghaiTech. The horizontal axis represents frame index, whereas the vertical axis represents the anomaly score. The pink window indicates the ground truth abnormal region.

The EER is ranged from 0.0 to 1.0, where a lower EER indicates better anomaly detection performance.

B. PARAMETER SETTINGS

We employed the Adam [24] with $\beta_1 = 0.9$ and $\beta_2 = 0.999$ to optimize the network weights. The hyperparameters for the network were set to a batch size of 1, epoch number of 30, learning rate of 0.0001 for the generator, and learning rate of 0.00001 for the discriminator. λ_I and λ_O in the loss function for the generator are set to 200 and 100, respectively. The numbers of temporal transformer layers $\mathcal{L}_t$ and spatial transformer layers $\mathcal{L}_s$ also were set to one and three, respectively.

C. ABLATION STUDY

To verify the effectiveness of predicting the optical-flow magnitude and incorporating the U-Net discriminator into the network, we conducted comparisons with our previous method (Method 1) [9], which only predicted frame images. Note that the architectures for G_{enc}, G_{ViViT}, and G^I_{dec} in Method 1 were the same as those in the proposed network. We also compared a network that predicts not only the future frame but also the optical flow magnitude (Method 2), and a network that incorporates the U-Net discriminator into the network to predict future frames (Method 3). In Methods 2 and 3, the anomaly scores at frame t are defined by (13) and (14), respectively.

$$a_{Method2}(t) = \left\| \left| \boldsymbol{I}_t - \bar{\boldsymbol{I}}_t \right| * \left| \boldsymbol{O}_t - \bar{\boldsymbol{O}}_t \right| \right\|_1, \tag{13}$$

$$a_{Method3}(t) = \left\| \left| \boldsymbol{I}_t - \bar{\boldsymbol{I}}_t \right| * \left| \boldsymbol{F}(2)_t - \bar{\boldsymbol{F}}(2)_t \right| * \left| \boldsymbol{F}(3)_t - \bar{\boldsymbol{F}}(3)_t \right| \right\|_1. \tag{14}$$

Moreover, we compared the proposed method with well-known anomaly detection methods [3], [4], [5], [7], [21].

V. RESULTS

Fig. 6 presents the reconstruction error between the predicted frame and the corresponding ground truth frame for the abnormal frames in the two different datasets. In each dataset, the anomaly map highlights the more anomalous regions. Fig. 7 shows the abnormality scores for Method 1 and the proposed network for the two datasets. In abnormal frames, the proposed network shows a higher abnormality score than Method 1, whereas it shows a lower score in normal frames.

The anomaly detection performance of the proposed method, Method 1, Method 2, and Method 3 is summarized

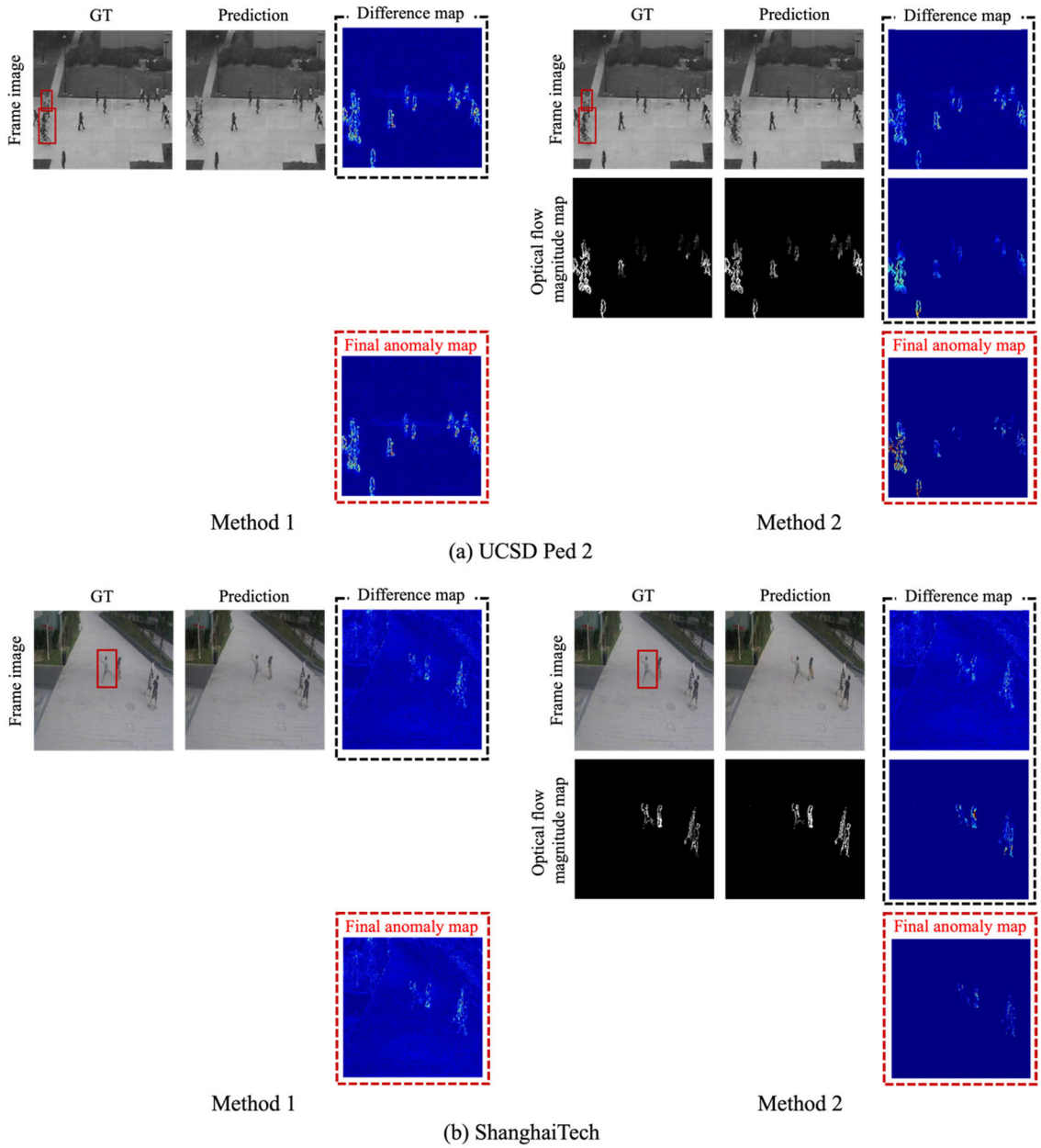

FIGURE 8. Comparison of the final anomaly map generated by Methods 1 and 2 in (a) UCSD Ped 2 and (b) ShanghaiTech. The first row denotes the GT frame, prediction result, and their difference map. The red bounding box denotes the true abnormal region. The second row denotes the GT for optical flow magnitude map, prediction result, and their difference map. The area in the red rectangle denotes the final anomaly map obtained by anomaly degree a(t).

in Table 1. The proposed network achieved a frame-level AUC of 97.5% for UCSD Ped2 and 85.8% for ShanghaiTech, showing improvements over Methods 1 (96.4% and 74.6%), 2 (97.2% and 79.2%), and 3 (97.0% and 82.8%). These results indicate that predicting the magnitude of the optical flow and incorporating the discriminator modestly improved the performance. Moreover, the EER of the proposed method on UCSD Ped2 was 0.100, which was lower than those of Methods 1 (0.317), 2 (0.266), and 3 (0.121). These results indicate that the proposed network can more accurately capture anomalous regions within frames.

Table 2 compares the frame-level AUC of the proposed network with those of well-known anomaly detection methods on the UCSD Ped2 and ShanghaiTech datasets. Here, we maintained the original settings specified in the referenced papers to ensure fair comparison. The AUC of the proposed network was higher than that of all well-known anomaly detection methods on the two datasets.

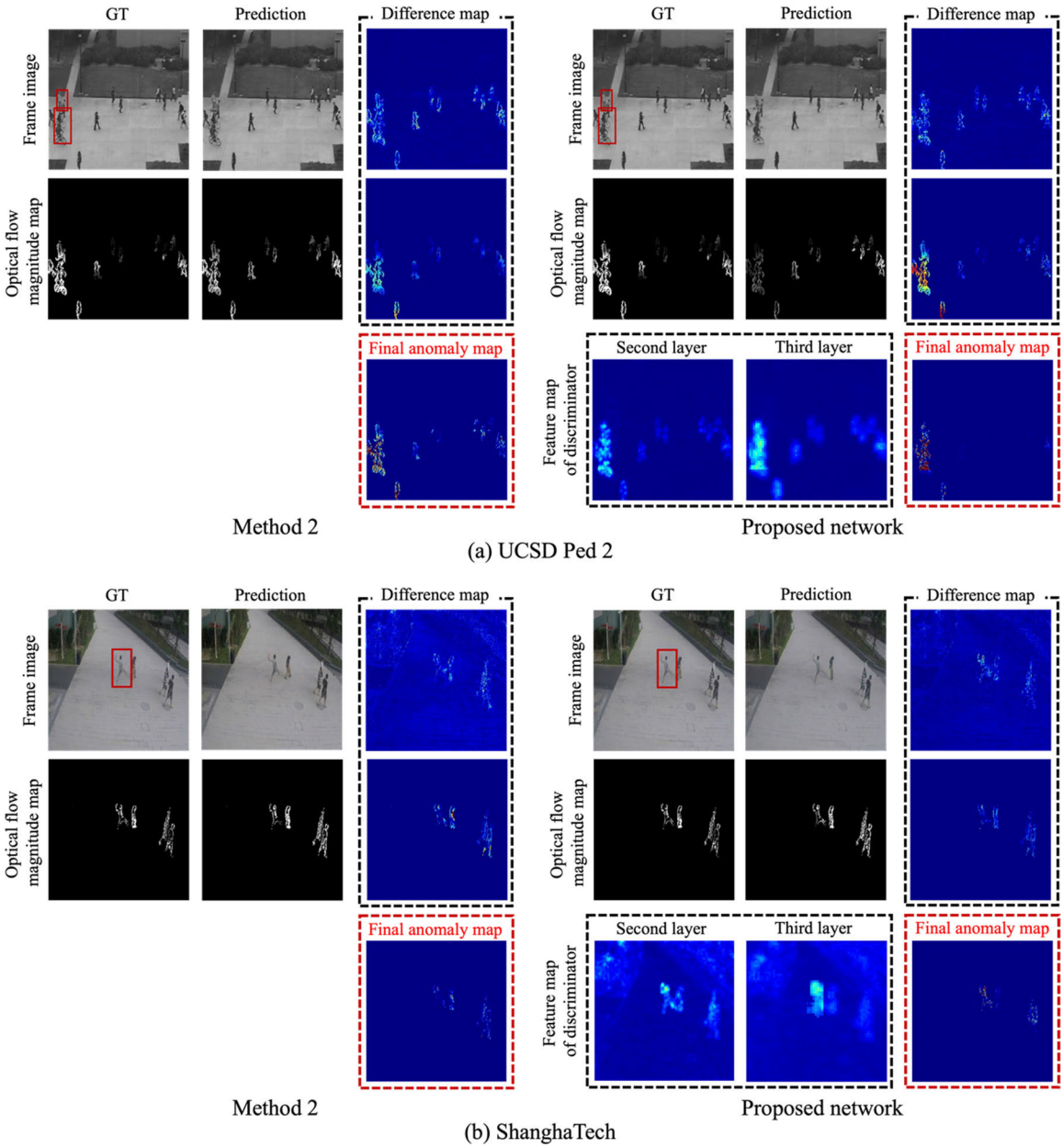

FIGURE 9. Comparison of the final anomaly map generated by Method 2 and the proposed network in (a) UCSD Ped2 and (b) ShanghaiTech. The first row denotes the GT frame, prediction result, and their difference map. The red bounding box denotes the true abnormal region. The second row denotes the GT for optical flow magnitude map, prediction result, and their difference map. The third column denotes the difference maps of the 2nd and 3rd layer features of the discriminator. The area in the red rectangle denotes the final anomaly map obtained by anomaly degree a(t).

VI. DISCUSSION

In this study, we developed an unsupervised video anomaly detection method for surveillance videos based on future frame and optical flow magnitude prediction using adversarial networks to improve the accuracy of anomaly detection. The AUC of the proposed network was higher than that of Method 1 using only future-frame prediction, Method 2 using both future-frame and optical flow magnitude prediction, Method 3 using future prediction with adversarial training, and well-known anomaly detection methods.

Fig. 8 shows examples of the difference images between the predicted frames and their corresponding ground truth frames. In Fig. 8(b), using Method 1, some errors (top left) in the final anomaly map can be observed in the areas of the difference images where there is no movement between consecutive frames. However, in Method 2, the errors in the static (no movement) regions improved compared with those in

TABLE 1. Ablation study results.

Dataset	Method			AUC [%]	EER
	Network	With OFM prediction	U-Net Discriminator		
UCSD Ped2	Method 1			96.4	0.317
	Method 2	✓		97.2	0.266
	Method 3		✓	97.0	0.121
	Proposed network	✓	✓	**97.5**	**0.100**
Shanghai Tech	Method 1			74.6	-
	Method 2	✓		82.8	-
	Method 3		✓	79.2	-
	Proposed network	✓	✓	**85.8**	-

* Numbers in bold indicate the best performance and underscored ones are the second best.

** OFM stands for the optical flow magnitude.

TABLE 2. Comparison of results obtained by the proposed network and well-known anomaly detection methods.

Method	Year	UCSD Ped2 [%]	ShanghaiTech [%]
Park *et al.* [3]	2020	95.4	72.8
Yuan *et al.* [7]	2021	96.4	-
Hashimoto *et al.* [21]	2022	96.5	-
Baradaran *et al.* [4]	2022	96.1	85.5
Ahn *et al.* [5]	2024	-	85.1
Proposed network		**97.5**	**85.8**

Method 1. This is because Method 2 incorporates optical flow magnitude prediction, which effectively captures motion-specific features. By focusing on temporal changes between consecutive frames, Method 2 can effectively suppress errors in static areas where no motion occurs. We believe that the optical flow enhances the ability of the networks to analyze the dynamic elements of a scene.

Fig. 9 shows examples of the predicted frames and difference images generated by the proposed network with and without adversarial training (Method 2). The quality of the reconstructed images generated by the proposed network was improved compared with the reconstructed images generated by the proposed network without adversarial training. Adversarial training encourages the generator to generate high-quality images by leveraging the feedback from the discriminator. This process enhances structural consistency, resulting in more accurate predicted frames. In this study, anomaly detection was performed by calculating the element-wise subtraction between the predicted future frames, optical flow magnitude, and their corresponding ground truth frames. The resulting difference map is further refined by weighting it with feature maps extracted from the middle layers of the discriminator, focusing on anomalous regions. As shown in Fig. 9, by weighting the difference map using the middle layer features of the discriminator, the proposed method effectively removes noise, resulting in a more accurate final anomaly map.

The first limitation of this study lies in the use of only two benchmark datasets, both of which consist of videos captured by static cameras for training and evaluating the proposed network. In future studies, we will apply the proposed network to other datasets, such as RetroTrucks [25], which includes videos captured by a dashcam with a complex dynamic background. Another limitation is that the proposed network sometimes struggles to capture detailed characteristics such as clothing and shoes because of the high-resolution of the videos in the ShanghaiTech Campus dataset. To address this shortcoming, we plan to introduce a semantic segmentation prediction into the proposed network. Semantic segmentation prediction considers object class information (e.g., people, cars, and backgrounds), enabling the accurate handling of fine details, such as clothing and shoes, in high-resolution videos. In contrast, future frame prediction relies on pixel-level movement and is susceptible to background noise and fine-detail interference. Furthermore, semantic segmentation prediction can learn not only the motion change between frames but also the appearance information based on object classes, potentially allowing for the comprehensive detection of both motion and appearance anomalies. We believe that this could improve the anomaly detection accuracy and enable focused analysis of specific objects.

VII. CONCLUSION

In this study, we developed an unsupervised anomaly detection method for surveillance videos based on the prediction of both future frame and optical flow magnitude using adversarial networks. The proposed network exhibited a higher anomaly detection performance than that obtained by conventional network using the prediction of only future frame without adversarial networks, the network using the prediction of both future frame and optical flow magnitude without adversarial networks, and well-known anomaly detection methods.

ACKNOWLEDGMENT

The authors would like to thank Editage (https://www.editage.com/) for English language editing.

REFERENCES

[1] X. Wang, Z. Yang, H. Feng, J. Zhao, S. Shi, and L. Cheng, "A multi-stream attention-aware convolutional neural network: Monitoring of sand and dust storms from ordinary urban surveillance cameras," *Remote Sens.*, vol. 15, no. 21, p. 5227, Nov. 2023, doi: 10.3390/rs15215227.

[2] *Surveillance Camera Market Size, Share & Trends Analysis Report by Product Type (IP-Based, Cellular Camera, Analog Camera), by Deployment (Indoor, Outdoor), by Resolution Capacity, by End-Use, by Region, and Segment Forecasts, Market Research Report*, Grand View Res., San Francisco, CA, USA, 2023, pp. 2023–2030. [Online]. Available: https://www.grandviewresearch.com/info/about-us

[3] H. Park, J. Noh, and B. Ham, "Learning memory-guided normality for anomaly detection," in *Proc. IEEE/CVF Conf. Comput. Vis. Pattern Recognit. (CVPR)*, New York, NY, USA, Jun. 2020, pp. 14360–14369, doi: 10.1109/CVPR42600.2020.01438.

[4] M. Baradaran and R. Bergevin, "Object class aware video anomaly detection through image translation," in *Proc. 19th Conf. Robots Vis. (CRV)*, May 2022, pp. 90–97, doi: 10.1109/CRV55824.2022.00020.

[5] S. Ahn, Y. Jo, K. Lee, and S. Park, "VideoPatchCore: An effective method to memorize normality for video anomaly detection," in *Proc. 17th Asian Conf. Comput. Vis. (ACCV)*, 2024, pp. 2179–2195.

[6] K. Roth, L. Pemula, J. Zepeda, B. Schölkopf, T. Brox, and P. Gehler, "Towards total recall in industrial anomaly detection," in *Proc. IEEE/CVF Conf. Comput. Vis. Pattern Recognit. (CVPR)*, Jun. 2022, pp. 14298–14308.

[7] H. Yuan, Z. Cai, H. Zhou, Y. Wang, and X. Chen, "TransAnomaly: Video anomaly detection using video vision transformer," *IEEE Access*, vol. 9, pp. 123977–123986, 2021, doi: 10.1109/ACCESS.2021.3109102.

[8] A. Arnab, M. Dehghani, G. Heigold, C. Sun, M. Lucic, and C. Schmid, "ViViT: A video vision transformer," in *Proc. IEEE/CVF Int. Conf. Comput. Vis. (ICCV)*, New York, NY, USA, Oct. 2021, pp. 6816–6826, doi: 10.1109/ICCV48922.2021.00676.

[9] S. Kobayashi, A. Hizukuri, and R. Nakayama, "Video anomaly detection using encoder–decoder networks with video vision transformer and channel attention blocks," in *Proc. 18th Int. Conf. Mach. Vis. Appl. (MVA)*, New York, NY, USA, Jul. 2023, pp. 1–4, doi: 10.23919/mva57639.2023.10215921.

[10] V. Mahadevan, W. Li, V. Bhalodia, and N. Vasconcelos, "Anomaly detection in crowded scenes," in *Proc. IEEE Comput. Soc. Conf. Comput. Vis. Pattern Recognit.*, Jun. 2010, pp. 1975–1981.

[11] W. Liu, W. Luo, D. Lian, and S. Gao, "Future frame prediction for anomaly detection—A new baseline," in *Proc. IEEE/CVF Conf. Comput. Vis. Pattern Recognit.*, Jun. 2018, pp. 6536–6545.

[12] E. Schönfeld, B. Schiele, and A. Khoreva, "A U-Net based discriminator for generative adversarial networks," in *Proc. IEEE/CVF Conf. Comput. Vis. Pattern Recognit. (CVPR)*, New York, NY, USA, Jun. 2020, pp. 8204–8213, doi: 10.1109/CVPR42600.2020.00823.

[13] T. Miyato, T. Kataoka, M. Koyama, and Y. Yoshida, "Spectral normalization for generative adversarial networks," in *Proc. Int. Conf. Learn. Represent. (ICLR)*, 2018, pp. 1–26.

[14] S. Woo, J. Park, J.-Y. Lee, and I. S. Kweon, "CBAM: Convolutional block attention module," in *Proc. Eur. Conf. Comput. Vis.*, V. Ferrari, M. Hebert, C. Sminchisescu and Y. Weiss, Eds., Cham, Switzerland: Springer, Sep. 2018, pp. 3–19, doi: 10.1007/978-3-030-01234-2_1.

[15] L. Chen, H. Zhang, J. Xiao, L. Nie, J. Shao, W. Liu, and T.-S. Chua, "SCA-CNN: Spatial and channel-wise attention in convolutional networks for image captioning," in *Proc. IEEE Conf. Comput. Vis. Pattern Recognit. (CVPR)*, New York, NY, USA, Jul. 2017, pp. 6298–6306, doi: 10.1109/CVPR.2017.667.

[16] Q. Wang, B. Wu, P. Zhu, P. Li, W. Zuo, and Q. Hu, "ECA-net: Efficient channel attention for deep convolutional neural networks," in *Proc. IEEE/CVF Conf. Comput. Vis. Pattern Recognit. (CVPR)*, Jun. 2020, pp. 11531–11539.

[17] W. Xing and K. Egiazarian, "Residual Swin transformer channel attention network for image demosaicing," in *Proc. 10th Eur. Workshop Vis. Inf. Process. (EUVIP)*, Sep. 2022, pp. 1–6.

[18] H. Wang, P. Cao, J. Wang, and O. R. Zaiane, "UCTransNet: Rethinking the skip connections in U-Net from a channel-wise perspective with transformer," in *Proc. AAAI Conf. Artif. Intell. (AAAI)*, 2021, vol. 36, no. 3, pp. 2441–2449, doi: 10.1609/aaai.v36i3.20144.

[19] A. Dosovitskiy, L. Beyer, A. Kolesnikov, D. Weissenborn, X. Zhai, T. Unterthiner, M. Dehghani, M. Minderer, G. Heigold, S. Gelly, and J. Uszkoreit, "An image is worth 16×16 words: Transformers for image recognition at scale," in *Proc. Int. Conf. Learn. Represent. (ICLR)*, vol. 16, 2020, pp. 1–22.

[20] G. Farnebäck, "Two-frame motion estimation based on polynomial expansion," in *Proc. 2nd Conf. Image Anal. (SCIA)*, J. Bigun and T. Gustavsson, Eds., Berlin, Germany: Springer, 2003, pp. 363–370, doi: 10.1007/3-540-45103-X_50.

[21] S. Hashimoto, A. Moro, K. Kudo, T. Takahashi, and K. Umeda, "Unsupervised video anomaly detection in traffic and crowded scenes," in *Proc. IEEE/SICE Int. Symp. Syst. Integr. (SII)*, New York, NY, USA, Jan. 2022, pp. 870–876, doi: 10.1109/SII52469.2022.9708745.

[22] A. P. Bradley, "The use of the area under the ROC curve in the evaluation of machine learning algorithms," *Pattern Recognit.*, vol. 30, no. 7, pp. 1145–1159, Jul. 1997, doi: 10.1016/s0031-3203(96)00142-2.

[23] L. Zhang, X. Wang, E. Cooper, N. Evans, and J. Yamagishi, "Range-based equal error rate for spoof localization," in *Proc. INTERSPEECH*, Aug. 2023, pp. 3212–3216.

[24] D. Kingma and J. Ba, "Adam: A method for stochastic optimization," in *Proc. Int. Conf. Learn. Represent. (ICLR)*, 2015, pp. 1–15.

[25] S. Haresh, S. Kumar, M. Z. Zia, and Q.-H. Tran, "Towards anomaly detection in dashcam videos," in *Proc. IEEE Intell. Vehicles Symp. (IV)*, New York, NY, USA, Oct. 2020, pp. 1407–1414, doi: 10.1109/IV47402.2020.9304576.

SHIMPEI KOBAYASHI was born in 2000. He received the B.S. degree from the College of Science and Engineering, Ritsumeikan University, in 2023, where he is currently pursuing the M.S. degree with the Graduate School of Science and Engineering. His research interests include video anomaly detection and deep learning.

AKIYOSHI HIZUKURI received the Ph.D. degree from Mie University, in 2014. He was with Mizuho Research and Technologies Ltd., from 2014 to 2018. Since 2018, he has been with Ritsumeikan University, where he is currently a Lecturer with the Graduate School of Engineering. His research interests include machine learning, computer vision, and medical image analysis. He is a member of IEICE, Japan, and IEEJ, Japan.

RYOHEI NAKAYAMA (Member, IEEE) received the Ph.D. degree from Mie University, in 2005. He was an Assistant Professor with Mie University Hospital, from 2005 to 2015. Since 2015, he has been with Ritsumeikan University, where he is currently a Professor with the Graduate School of Engineering. He was a Visiting Assistant Professor with the University of Chicago, from 2008 to 2009. His research interests include medical image recognition and machine learning. He is a member of SPIE, IEICE (Japan), IPSJ, JAMIT, ISJ, and JSRT.